Installation and operation instructions

TRAILER REVERSE LIGHT SWITCH TBS-231-L



Qeino

Instructions for Installation and Use of the Device

General

The TBS-231-L reverse light switch is intended for use with trailers that are also equipped with one or two rear-facing reverse lights. The device uses 12 volts of power from the vehicle. **NOT FOR ROAD USE.** You may use the device off-road, such as on private property or in parks. Only activate the device when you are outside of road traffic areas. The device is controlled by the vehicle's own turn signals. Each unit is tested at the factory. The 6-month warranty does not cover damage to the device caused by improper installation. Qeino Oy is also not responsible for any damage that results directly or indirectly from the use of the device. **Turn off the device when you return to public roads.**

Usage of the Device

The device is designed for use in trailers or other towed vehicles connected to cars with a 7-pin connector. The device operates within a temperature range of -30 to +85 °C. The enclosure of the device is splash-proof but not completely waterproof. The device cannot withstand immersion in water, such as if installed behind a boat trailer.

Installation and Maintenance

If you have sufficient expertise, you can install the device yourself. Install the device so that the wires are oriented downward to prevent dirt and rainwater from entering the device through the wires. If necessary, contact a qualified vehicle electrical service company to perform the installation according to the instructions in this document.

If the device becomes dirty, clean it by wiping the surface with a damp cloth. There are no user-serviceable parts inside the device.

Disposal of the Device

The TBS-231-L reverse light switch meets European Union environmental requirements. The device should be delivered to an electronics recycling company or another electronic waste collection point when it is no longer in use. The device must not be disposed of with regular household waste.

Recycling of Packaging

The plastic in the packaging is LD polyethylene. The best way to recycle the plastic is to take it to a plastic recycling point. The packaging box is made of recyclable cardboard.





Qeino Oy
www.qeino.fom
info@qeino.com

Important Information before installation

- The device is intended for use in trailers equipped with LED lights.
- NOT FOR ROAD USE. You can use the controller off-road, in a park area, or in your yard. Disconnect the device while driving among regular traffic. Only activate the device when you are off the main road.
- Install the device in a VOLTAGE-FREE trailer.
- Refer to your car's manual to determine the maximum current your car fuse can handle. The maximum current is 5 Amperes. Therefore, you can connect two work lights operating at 12 Volts with a total power of up to 60 Watts. We recommend using LED lights. The power of the lights is limited by the fuse in the towing vehicle. Refer to your car's manual to determine the maximum current your car fuse can handle.
- Read the installation instructions below carefully before installing the device.

Parts list

- Controller
- Cable gland 10 mm
- Mounting strap 4 pcs
- scotch lock connector 6 pcs
- Abiko flat connector 6 pcs
- Optional: work lights
- Optional: mounting bracket

Technical information:

- Operating voltage: 12–16 VDC
- Standby current: 40 mA
- Operating temperature: -30 . . . + 85 C
- Dimensions of the housing: 125 x 80 x 32 mm

Operating principle

The device uses power from the 7-pin trailer cables to switch separate reverse lights on and off. The lights are switched on using the car's turn signal system.

Qeino Oy
www.qeino.fom
info@qeino.com

Qeino

Mounting the device

1. **Place work lights at the rear of the trailer:** Before installing the device, place one or two white work lights at your desired location at the rear of the trailer. Note that additional lights must not obscure the trailer's own lights or license plate.
2. **Attach the device:** Install the mounting bracket in place or make two or four mounting holes for the controller and secure the controller in place using the supplied cable ties. Install the controller in a location where you can easily switch the device on and off, such as on the drawbar or the rear of the trailer. Because the wires in the device are no longer than one meter, the easiest way to avoid extending the wires is to install the device at the rear of the trailer.
3. **Route the wires:** The wires coming from the device can be routed under the frame. Alternatively, you can drill a 10 mm hole in the frame and route the wires through it. In that case, use the cable gland included in the package.

Connecting the wires

Connecting the Wires Connect the wires from the device preferably by soldering or connecting the wires directly to the appropriate connectors in the rear lights using suitable Abiko flat connectors. Alternatively, you can connect the wires using the scotch lock connectors included in the package, but their use may later cause poor contact. Before installation, it is advisable to ensure that the colours of the trailer wires correspond to the list below. The wire colours described here are the same as those in a standardized trailer. Your trailer may also use wires of different colours. In that case, make sure the wires are in the correct order. Connect the controller to the trailer wires as follows:

- **Brown:** Headlight (+ 12 Volts) (Left or right)
    - **(Or** Black**:** In the trailer, the left headlight wire is black. The right taillight wire is brown.)
- **White:** In the trailer, the ground wire colour is white
- **Yellow / green:** Turn signal. Connect one wire to the left turn signal and the other wire to the right turn signal. In the trailer, the left turn signal wire is yellow. The right turn signal wire is green.
- **Blue:** Relay contacts. Connect the lights as shown in the image between the trailer headlight and ground, so that the relay contacts act as a switch. If the trailer has a fog light, the wire is blue. Do not use this wire in the installation.

Refer to the wiring diagrams on the next page.

Qeino Oy
www.qeino.fom
info@qeino.com

Using the device

Turn on the car headlights so that the trailer lights are on. Activate the hazard lights briefly so that both turn signals flash at least once, causing the trailer reverse lights to come on. The lights are turned off by indicating a turn signal to the left or right. Additional Wiring Information

Qeino Oy
www.qeino.fom
info@qeino.com

Additional wiring information

Wiring of rear lights

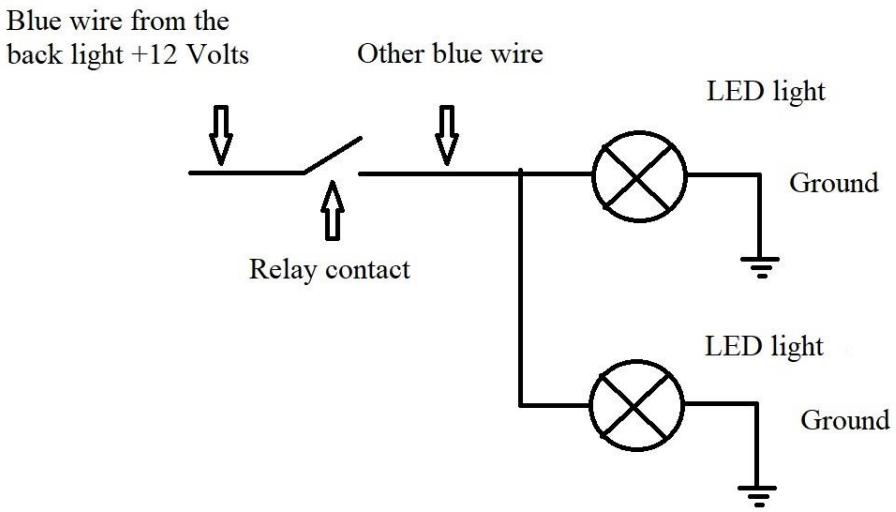

Wiring of the connector on the trailer

1/L	Left turn signal (yellow)
2	Reverse light (Blue)
3/31	Ground (White)
4/R	Right turn signal (Green)
5/58-R	Right taillight (Brown)
6/54	Brake light
7/58L	Left taillight (Black)

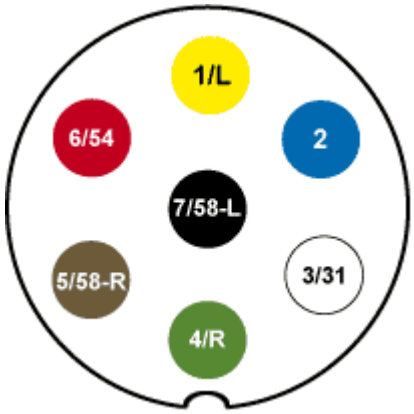

Qeino Oy
www.qeino.fom
info@qeino.com